IVECO
SPIRITO IN MOVIMENTO
IVECO
IVECO S-WAY

Your IVECO S-WAY at a glance

A new colour language:
IVECO Grey meets a touch of red

XCursor 13 engine,
up to 11% fuel efficiency

Superior onboard living
and driving ergonomics

Highway Assist for enhanced
driving comfort

Born Connected. Built to Evolve
with Over-the-air capabilities
from day one

IVECO Services to maximize uptime
and business productivity

Engineered for your success

Profitability and sustainability

Improved fuel efficiency and reduced CO_2 emissions delivered by the XCursor engine, powertrain and vehicle controls, now further enhanced by aerodynamic refinement. Up to 10% as certified by TÜV.

Unique design and driving comfort

Superior onboard living thanks to the interior design, dashboard with customizable materials and trims, TFT instrument cluster, infotainment and mirror cams. State-of-the-art “car-like” feeling: fully adjustable steering wheel and lower driving position giving enhanced comfort and responsiveness.

Advanced assistance and safety

GPS Predictive Drive as standard, Airbag, new Highway Assist with Lane Centring and a full comprehensive set of safety functionalities, including ADDW, to protect road users at 360°.

Born Connected. Built to Evolve with Over-the-air capabilities from day one

Your new IVECO vehicle is always state-of-the-art, maximizing your time on the road.

IVECO Services for your daily work

Services designed to simplify your work and protect your business. Keep your day running smoothly and your vehicle productive.

Exterior style

Stylish in all environments

A wide range of front grilles are available to suit your taste: glossy and metal finishes, matt or even body-coloured elements allowing operators to adapt their IVECO S-Way style to mirror their corporate branding. The new IVECO logo is available in chrome or matt gun metal finishes.
The mirror cams allow for better visibility for the driver and improve aerodynamics aiding fuel economy.
The front face includes LED or traditional headlamps with LED daytime running lights as standard, radars for ADAS functions, steps and grab handles to access the windscreen and side air deflectors designed to keep the door and mirrors clear even in adverse weather conditions.
The bumper can be chosen in plastic or hybrid, in black or cab colour to match the requirements of your specific mission.

The right cab for you

Choose from the full width AS sleeper cab with low or high roof for longer distance use or the compact AT sleeper cab with low or high roof for more regional missions. For those missions that don't require a sleeper cab, the AD day cab is the ideal choice.

A driver-centric touch and feel for superior comfort and safety

Superior onboard living thanks to ergonomic interior design, customizable dashboard finishing, great driving position, full TFT instrument cluster and infotainment (10 inch) and electric parking brake. State-of-the-art car like feeling: fully adjustable steering wheel and lower driving position for enhanced comfort and responsiveness.

A new interior design

The driver and passenger's comfort is guaranteed by a choice of seats, all with full backrest. Choose from vinyl, fabric or leather, heated, air suspension, lumbar support and even seat belt colour. With the improved ergonomics of the steering wheel and controls, every driver will be comfortable.

Everything in its place

Spacious drawers and compartments for storing documents and personal belongings, both inside and under the cab. 2 USB ports, 12V and 24V power sockets and 4 cup and bottle holders are standard on the dashboard.

Foldable table

The foldable table on the passenger side of the dash panel is ideal for those tasks in the cab that require a flat worksurface with a useful fast-charging USB-C socket alongside.

Infotainment

Enjoy your life on board with the 10-inch high-resolution colour display integrated into the dashboard. Navigation is simple and intuitive, and you can link your mobile device with mirroring and use IVECO Driver Pal with the in-cab microphone. TomTom live navigation, Over-the-Air update and the new IVECO App Store are all available here.

The best performer in TCO

Driving fuel consumption down

Up to 10% reduction in fuel consumption thanks to the driveline, improved aerodynamics and state-of-the-art GPS predictive drive.
TCO is lowered to extremely competitive level thanks to fuel consumption reduction and a world of maintenance and telematic services that are built around the customer.
XCursor 13 engine with up to 580 hp and 2.800 Nm torque, XCursor 13 Natural Gas 500 hp and 2.200 Nm and long rear axle ratios 2,17 and 2,06, improved and optimized gearbox logic. 3 driving modes from ECO, Normal and Performance with parameters that can be customized by the driver or through telematics.

Services to improve TCO

Advanced new features and professional services can raise fuel efficiency by a further 4%.
Three connected standard bundles – EASY, SUPPORT and PERFORMANCE – satisfy every customer's needs with increasing levels of control, efficiency improvement and the collected data analysis capability. A complete set of premium services paves the way for fully customized Mobility Solutions.

Advanced Driver Assistance Systems (ADAS)

When technology takes care of your safety and that of other road users to give you a calm, stress-free driving experience. Level 2 ADAS systems support the driver to be more comfortable and safer.
In addition, IVECO ON and the Professional Safe Report provide the data you need to monitor safety risks—you get actionable insights to improve driving behaviour, reduce accidents and lower insurance costs.

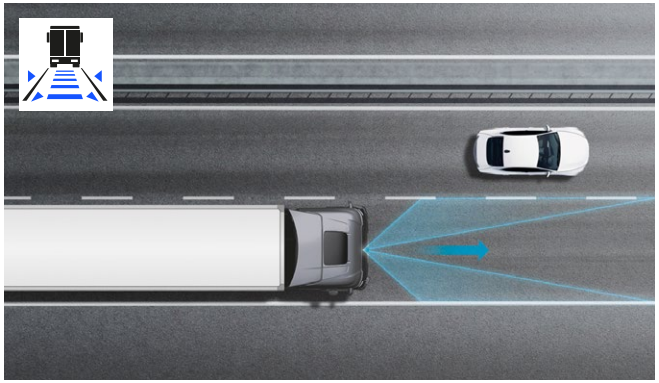

Highway assist
Actively supports the driver in keeping just the centre of the lane.
It uses the Front Camera, Active Steering and the Capacitive Hands-off Detection. Can be automatically activated by the Adaptive Cruise Control.

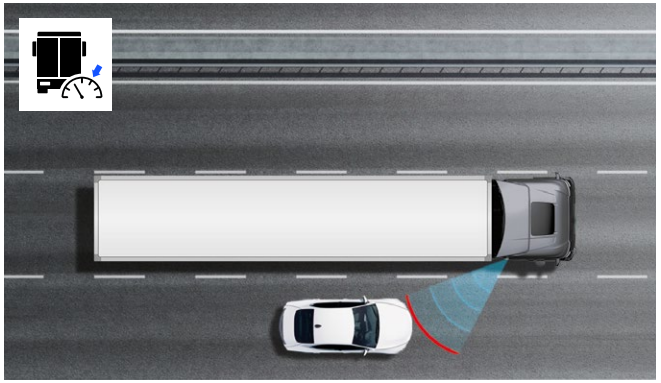

Passive lane change assist
The side radar supports the driver also when changing lane, above 30 km/h, detecting if a road user is in the blind spot providing visual and acoustic warnings.

Outstanding driver assistance

The latest European General Safety regulations have brought to IVECO S-Way new features for Advanced Driver Assistance Systems and protection of other road users.

ALC (Alcohol Interlock)
Prevents people whose driving is impaired due to alcohol consumption from driving a motor vehicle.

ESS (Emergency Stop Signal)
Warns the road users behind the vehicle via hazard lights, when braking heavily.

BSIS (Blind Spot Information System)
Detects road users moving at 5-20 km/h speed in the nearside blind spot zone, providing visual and acoustic warnings.

MOIS (Moving Off Information System)
Detects nearby road users in the front blind spot zone, providing visual and acoustic warnings.

REV (Reversing Detection)
Provides a clear view of road users and obstacles behind the vehicle when reversing, thanks to a camera placed in the rear crossmember.

ADDW (Advanced Driver Distraction Warning)
The system monitors the driver's behaviour above 20 km/h through an infrared camera. If detects a distraction, it provides visual pop-up in the cluster and audible warnings.

ISA (Intelligent Speed Assist)
Is a system which advise drivers of the current speed limit by providing visual and acoustic feedback

AEBS (Advanced Emergency Braking System)
Recognizes a potential front collision, warning the driver and slowing down the vehicle as much as possible. Guaranteed full braking from 80 to 0 km/h.

LDWS (Lane Departure Warning System)
Warns the inattentive driver of the departure of the vehicle from the lane when turn indicators are not activated.

High-efficiency engines

XCursor 13 diesel brings state-of-the-art powerline technologies such as dual flow turbine volute for downspeeding, higher fuel injection pressure (2.500 bar), new lighter cylinder block, crankshaft and camshaft, smart auxiliaries and friction reductions. Top engine rating produces up to 580 hp and 2.800 Nm of torque, perfect for heavy-duty missions that require maximum performance, while 500 hp rating, with 2.600 Nm of torque is the best to maximize efficiency on long-haul missions. Engine weight has been reduced by 10% and specific engine oil has been developed to further reduce frictions. The new High Performance Engine Brake is the best in the market, capable of substituting the Intarder in most missions.

XCursor 13 Natural Gas version produces 500 hp and 2.200 Nm of torque while achieving up to 11% fuel consumption reduction. This powerful performance comes with the environmental advantages of Natural Gas, which can help to significantly reduce vehicle emissions, with up to 90% reduction in CO_2 when run on biomethane.

Diesel Engine Line-Up

Engine	Displacement (litres)	Turbo	Power			Torque		IVECO S-Way	
			hp	kW	rpm	Nm	rpm	AS	AT/AD
C9	8,7	WG	340	251	1.710 - 2.200	1.400	1.100 - 1.710	-	•
			360	265	1.530 - 2.200	1.650	1.200 - 1.530	-	•
		eVGT	400	294	1.655 - 2.200	1.700	1.200 - 1.655	-	•
XC13	12,9	eVGT	460	338	1.600 - 1.650	2.500	820 - 1.100	•	•
			500	368	1.600 - 1.650	2.600	843 - 1.100	•	•
			540	397	1.500 - 1.650	2.700	950 - 1.200	-	•
			580	426	1.450 - 1.850	2.800	980 - 1.450	•	-

Natural Gas Engine Line-Up

Engine	Displacement (litres)	Turbo	Power			Torque		IVECO S-Way	
			hp	kW	rpm	Nm	rpm	AS	AT/AD
C9	8,7	WG	340	251	1.600 - 2.000	1.500	1.100 - 1.600	-	•
			400	294	1.575 - 2.000	1.700	1.200 - 1.575	-	•
XC13	12,9	eVGT	500	368	1.600 - 1.700	2.200	1.000 - 1.500	•	-

Cursor 9

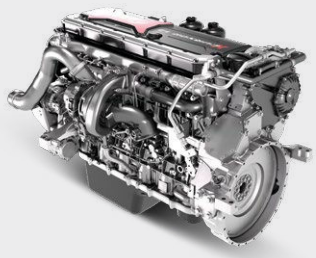

XCursor 13

Cursor 9G

XCursor 13G

IVECO
IVECO S-WAY

Sustainability

Natural Gas is the most environmentally friendly fuel commercially available. IVECO's 9 litre Cursor Natural Gas and the 13-litre XCursor Natural Gas engines can be chosen. Thanks to the EU derogation, 18 t and 26 t Natural Gas vehicles can have a bonus mass to match the increase in tare weight.
New CNG tanks 2x 135 litres and 2x 175 litres each side are now available. 190 kgs of methane giving a range up to 800 km. The IVECO S-Way Natural Gas is particularly at home in major cities – its low emissions mean it is allowed to drive in restricted traffic zones and its quiet operation makes it perfect for night-time work.

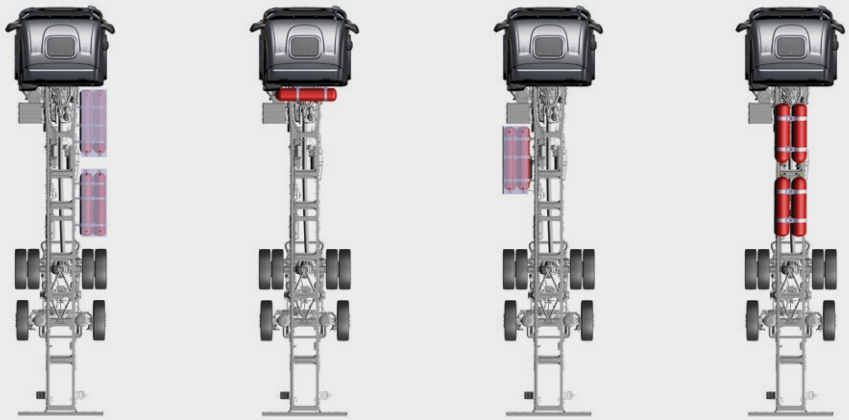

Double CNG RH side | CNG tanks behind cab | CNG tanks LH side | CNG tanks on chassis top

Compressed natural gas

- **CNG cylinder** steel type-1: 70, 80, 115 and 148 litres available.
- **CNG packs** can be mounted to the side members, behind the cab or on top of the frame.
- **New CNG tanks** 2x 135 litres and 2x 175 litres each side. 190 kgs of methane giving a range of 800 km.
- **Side CNG** packs mounted in the most forward position to leave space for the installation of equipment.
- **NGV1+NGV2 refueling** available for the whole range.
- **Double CNG pack on the right side** available for rigids from WB 5.500 for an overall capacity of more than 1.500 litres.

LNG – up to 1.700 km | LNG – up to 1.500 km | LNG – up to 1.250 km | LNG – up to 850 km

Liquid natural gas

- **LNG tanks** in stainless steel with 2 diameters
  26” section (660 mm): 250, 410 and 540 litres
  24” section (610 mm): 400 litres.
- **LNG packs** mounted in the most forward position to leave space for the installation of equipment.
- **Best-in-class fuel capacity** in the Market for 4x2 artics: 1.080 litres.
- **Single LNG tank** can be on the left or right.

Line up

Choose the IVECO S-WAY to suit your operation

Artic

IVECO S-Way Diesel		4x2		6x2C		6x2P (Twin)
Cab roof	AS	-		-		
	AT		-		-	-
	AD		-		-	-
Engine / Gearbox	C9	Automated	-	-	-	-
	XC13	Automated	Automated	Automated	Automated	Automated
Rear axle suspension	SR	Pneumatic Full Pneumatic		Pneumatic Full Pneumatic		Pneumatic Full Pneumatic
Wheelbases (mm)		3.650 - 3.800		3.800 - 4.000		3.200 - 3.300

Rigid

IVECO S-Way Diesel		4x2		6x2P		6x2C
Cab roof	AS	-		-		
	AT		-		-	-
	AD		-		-	-
Engine / Gearbox	C9	Automated	-	-	-	-
	XC13	Automated	Automated	Automated	Automated	Automated
Rear axle suspension	SR	Pneumatic Full Pneumatic		Pneumatic Full Pneumatic		Pneumatic Full Pneumatic
Wheelbases (mm)		3.800 - 6.700		3.120 - 6.050		4.200 - 4.500

Artic

IVECO S-Way Natural Gas		4x2
Cab roof	AS	
	AT	-
	AD	-
Engine / Gearbox	C9G	-
	XC13G	Automated
Fuel system	CNG	Up to 800 km
	LNG	Up to 1.700 km
Rear axle suspension	SR	Pneumatic Full Pneumatic
Wheelbases (mm)		3.800

Rigid

IVECO S-Way Natural Gas		4x2		6x2P	
Cab roof	AS	-		-	
	AT		-		-
	AD		-		-
Engine / Gearbox	C9G	Automated Automatic	-	Automated Automatic	-
	XC13G	-	Automated	-	Automated
Fuel system	CNG	Up to 1.000 km		Up to 1.000 km	
	LNG	Up to 1.700 km		Up to 1.700 km	
Rear axle suspension	SR	Pneumatic / Full Pneumatic		Pneumatic / Full Pneumatic	
Wheelbases (mm)		3.800 - 6.300	5.700	3.120 - 6.050	4.200 - 6.050

IVECO Services Solutions

At IVECO, we deliver Mobility Solutions that best meet your needs. Our goal is to help you reduce Total Cost of Ownership while increasing productivity by focusing on vehicle health and enhancing the driver experience, through an integrated portfolio designed to support your mission.

Uptime

Unexpected stops cost you. IVECO Uptime prevents them. Through continuous monitoring and remote diagnostics delivered by the IVECO Uptime Center and network, we reduce unplanned downtime by up to 24%.

Productivity & Efficiency

In transport, profitability depends on daily decisions. IVECO Productivity & Efficiency gives you the insights to make them. With vehicle data visibility and analytics, it helps reduce costs by up to 5% while improving safety, routes and compliance.

Driver Care

Drivers operate under constant pressure. IVECO Driver Care reduces complexity and cognitive load. Through voice interaction, connected navigation and real-time guidance, it keeps drivers focused. Accidents can be reduced up to 5%.

Safety & Security

Managing risk requires visibility and control. IVECO Safety & Security delivers both. With IVECO ON connectivity and continuous monitoring, it enables early detection of unsafe behaviour and reduces accident exposure by up to 25%.

Parts & Accessories

Customize your vehicles and enhance life on board with our extensive selection of high-quality parts and services.

Connectivity

A smart way forward

Choose the connected solution that fits your business – from essential visibility to uptime support and advanced fleet insights. Add Premium services to tailor to your mission needs.

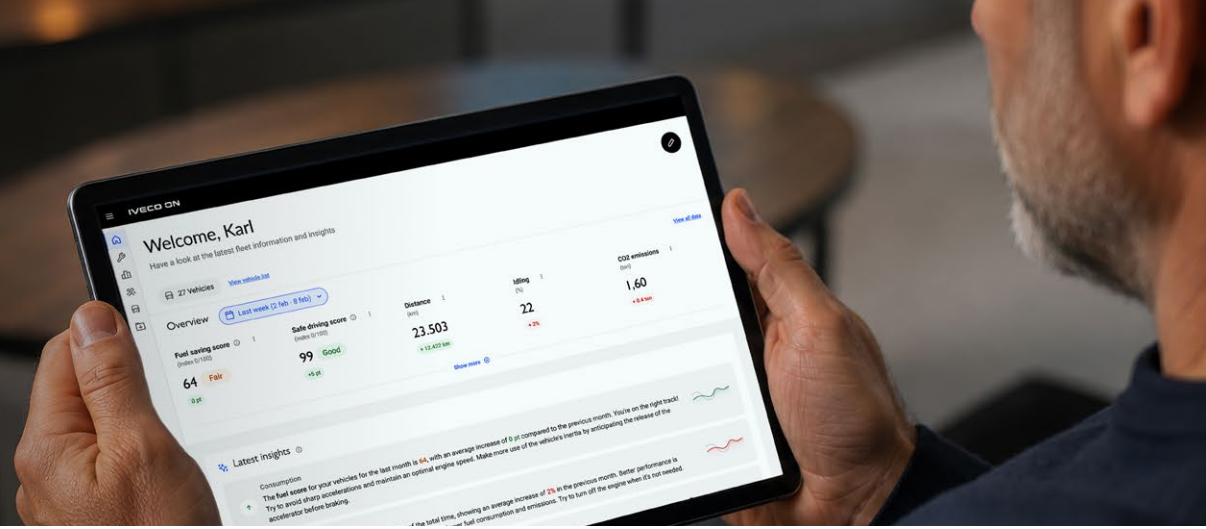

EASY

IVECO ON^{ADMIN} + Easy App

Your smart start

Access IVECO ON^{ADMIN} and the Easy App to manage your vehicles — with essential tools for vehicle administration, maintenance planning and daily operations, all within reach — anywhere, anytime.

SUPPORT

EASY + Uptime monitoring

Uptime first

Includes EASY, plus proactive vehicle monitoring through the Customer Uptime Center — enabling early detection of potential issues so we can act in advance and maximise your vehicle availability.

PERFORMANCE

SUPPORT + IVECO ON^{PRO}

Your fleet under control

Includes SUPPORT, plus IVECO ON^{PRO} for advanced insights to monitor vehicle performance and routes, reduce fuel consumption and improve driving style — helping you optimise efficiency across your entire fleet.

Premium Services: add more value to every mission

IVECO ON Web API

Integrate IVECO vehicles data into your systems.

Professional Fuel Advising

Get expert coaching from IVECO performance specialists to help you improve fuel efficiency.

Fleet Management

Get full control on your fleet productivity.

Tacho Data Download

Manage compliance with ease.

Professional Fuel Report

Receive detailed analytics on your fleet Fuel Efficiency.

Professional Safe Report

Promote safer driving and improve fleet safety.

Driver Assistant

Get the best out of the 10” Infotainment with yearly extensions of connected content.

Maintenance & Repair

A well-maintained vehicle is more reliable, fuel-efficient and retains its value over time.
IVECO Maintenance & Repair helps you protect your productivity with a proactive, structured service approach. You benefit from expert support by certified IVECO technicians using dedicated tools, advanced diagnostics and up-to-date procedures—ensuring fast, precise interventions. All services use IVECO Original Parts, for consistent quality and long-term performance.

You can choose among pre-designed bundles or tailor your solutions combining the services and adding the coverages that better support your needs.

Combine the M&R services to build a contract tailored to your needs

Maintenance
Maintenance and lubricants, oils and fluid changes according to the Maintenance Plan as described in the customer handbook.

Wear
Covers clutch, brake pads, brake discs, brake drums or brake linings for drum brakes.

Driveline
Covers engine, fuel injection, gearbox, transmission propeller shaft and axle repairs.

Driveline Plus
Provides an intermediate level of protection, adding to the Driveline contract repairs to exhaust system, starter and alternator, other gearbox components, electricals and PTO Multipower.

Full Repair
Raises further the level of cover extending the Driveline Plus contract with repairs to the braking system (excluding wear components), clutch cylinder, suspension, heater, air conditioning, air compressor.

Additional coverage

You can further customize your cover with additional options:

ANS 24-hour assistance
Roadside assistance service for repairs covered by the warranty.

Towing service
Tow truck service conveying to the nearest repair point for repairs covered by the warranty (tow truck not included).

Auxiliary batteries
Repair and/or replacement of batteries, including ANS 24-hour callout where covered under the maintenance agreement.

Oil top up
Engine oil filling limited to 2 litres per 3.000 km.

Light bulbs
Replacement of faulty lamps.

Wiper blades
Replacement of windscreen wiper blades once a year.

Choose and combine to fulfill your requirements

You can choose the best service* levels for your business size and needs, knowing that the associated costs are fixed and predictable.

ESSENTIAL
Maintenance

ADVANCED
Maintenance + Driveline

PREMIUM
Maintenance + Full Repair

FULL REPAIR
Driveline + Extradriveline

*Wear selectable as option.

Parts & Accessories

IVECO offers you a wide range of parts and accessories to increase productivity, enhance versatility, optimize profitability, and keep your vehicle maintenance costs under control, improving your digital life on board and increasing your comfort.

Genuine Parts

HIGH PERFORMANCE

Designed to meet IVECO standards, certified **Genuine Parts** ensure **consistent performance** and **high quality** for your vehicle, with a wide choice of components.

Each part is tested and certified to guarantee IVECO quality. Delivery comes within 24h thanks to the extended IVECO network of Authorized workshop ready to support.

Reman Parts

SUSTAINABLE CHOICE

Through a dedicated and constantly evolving remanufacturing process, **IVECO Reman Parts** are restored by expert technicians to **original performance and specifications**. Each component is inspected, remanufactured and rigorously tested in line with IVECO quality standards.

Reman Parts deliver a sustainable and eco-friendly process to reduce waste and are a cost-effective solution.

Accessories

ENHANCED EXPERIENCE

IVECO Accessories offers an exclusive range of products designed to enhance the aesthetics, comfort, safety, and technological capabilities of your vehicle. Every accessory enriches and personalizes your driving experience, while boosting connectivity and operational efficiency.

IVECO Accessories are easy to install and fit perfectly on the vehicle, maximize the driving experience and the versatility of the vehicle.

IVECO
00800|4|8|3|2|6|000
Assistance Non-Stop

IVECO Non Stop

IVECO Assistance Non-Stop is just a phone call away 24 hours a day, 7 days a week to keep your IVECO S-Way and your business running.
IVECO Non-Stop is the original IVECO smartphone application that you can use to communicate with IVECO if your vehicle breaks down. Just insert your vehicle information (VIN and registration plate) and with a simple push of a button you can send a request for assistance to the IVECO Customer Uptime Center. We will take care of your request immediately, activate the nearest workshop and follow up on the vehicle's repair. Through the app you can receive updates on the progress of your vehicle's assistance.

IVECO CAPITAL

Financial Services

IVECO CAPITAL is the financial services brand of Iveco Group, offering dealers and end-customers a comprehensive range of financing, rental, insurance and service solutions for commercial vehicles, powertrains and buses.

IVECO CAPITAL delivers tailored and flexible Mobility Solutions worldwide, empowering customers to move forward and realise their full potential.

Discover more on
www.ivecocapital.com
or contact your IVECO Dealer
or IVECO Direct Sales.

IVECO

SPIRITO IN MOVIMENTO

PUBLICATION H2645601MASTER - 07/26

The information and images in this brochure are provided as a guideline only. IVECO reserves the right to make changes for any commercial or construction reasons at any time without notice. Copyright © IVECO. All rights reserved.
Unless otherwise indicated, the texts, images, visual contents, portraits, logos, brands, and trademarks in this document are owned by IVECO or used with third-party permission. Reproduction, modification, or use without prior written consent is prohibited.

The information provided reflects the most current version of the software at the time of publication. As the products are continuously updated and enhanced, some content may become outdated and may not reflect the most recent information.